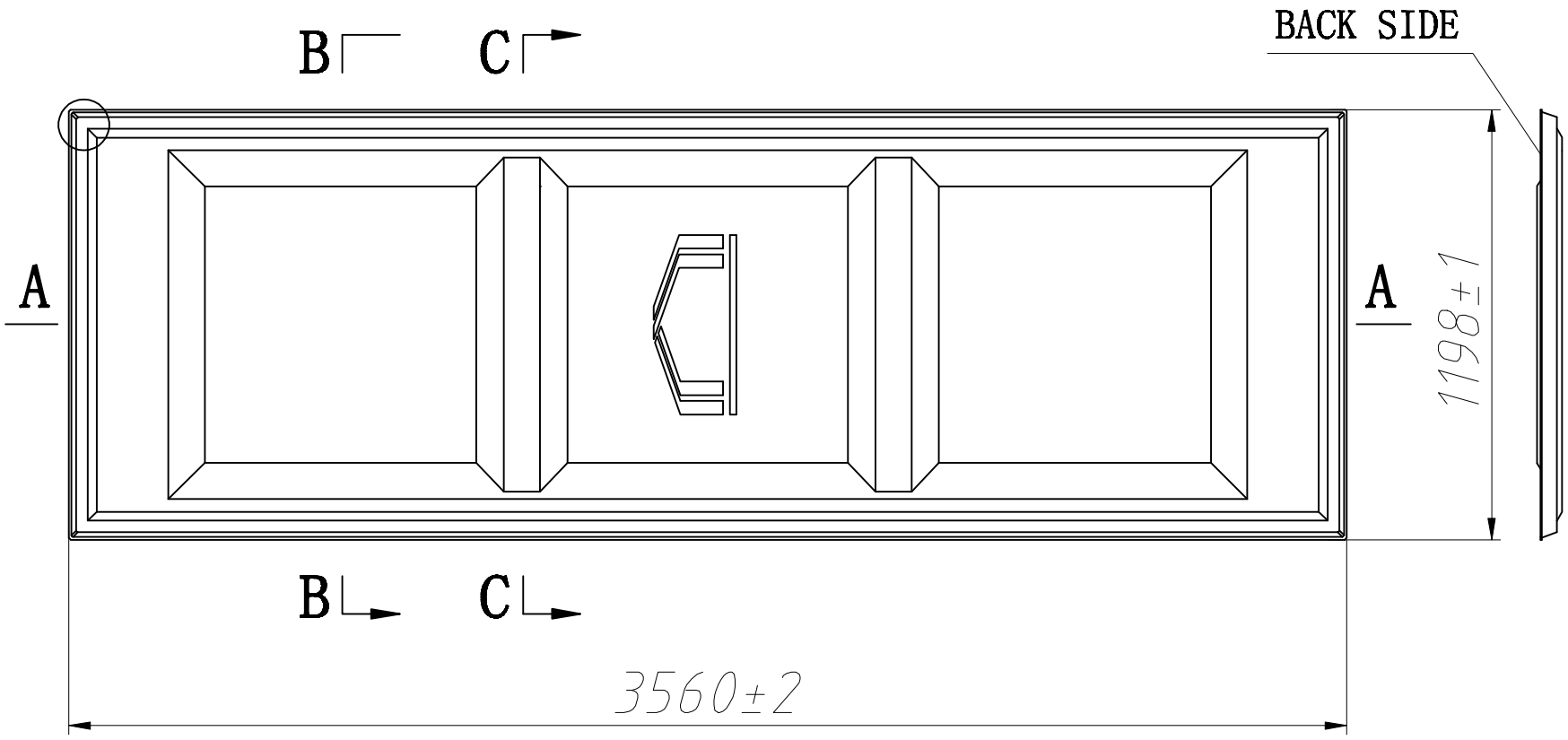
BACK SIDE
B
C
A
A
1198±1
B
C
3560±2

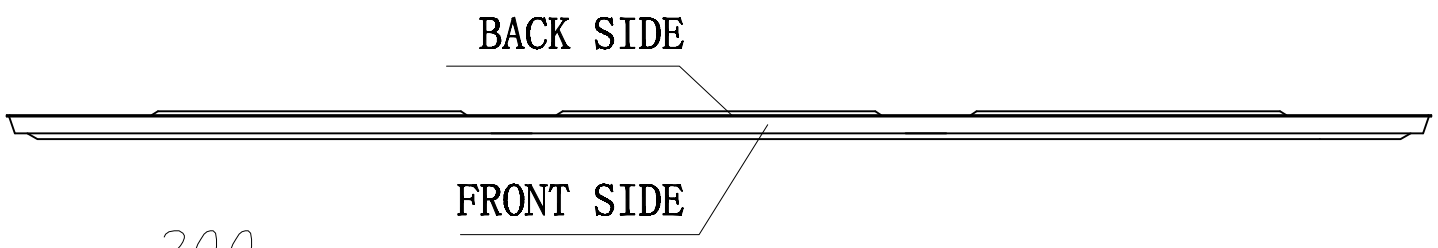
BACK SIDE
FRONT SIDE

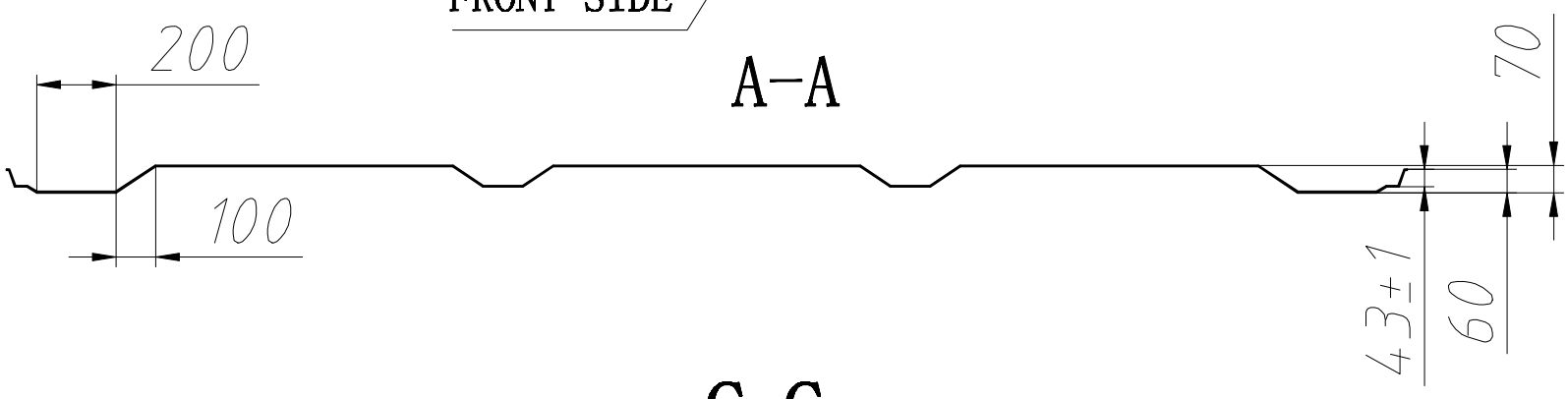
200
A-A
70
100
43±1
60

C-C
3:1

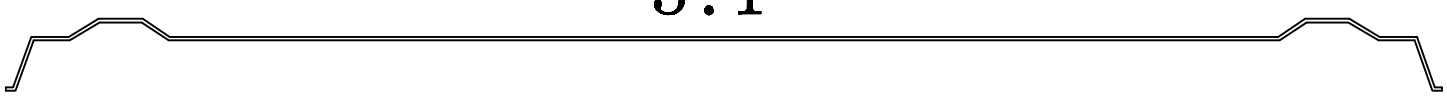

B-B
3:1

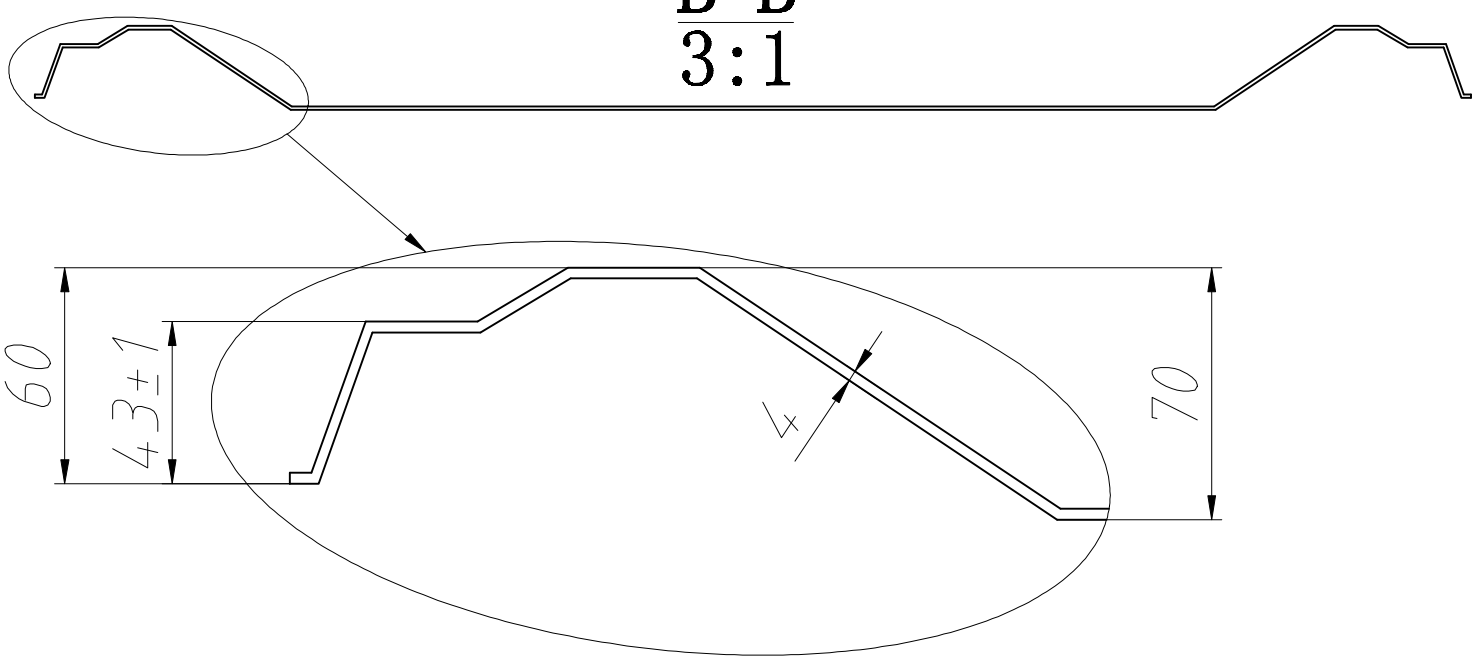
60
43±1
4
70